INSTALLATION GUIDE

ROLLER SHADE

LIFT SYSTEMS: CORDLESS LIFT

The difficulty level of this installation is ranked at **Level** 1 - *A piece of cake!*

If you have questions or get stuck, call our Customer Care Team at 888-257-1840, or email customercare@selectblinds.com

HARDWARE AND PARTS INCLUDED

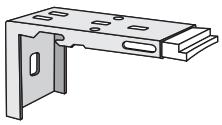

CASSETTE BRACKETS

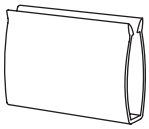

CORDLESS HANDLE

SCREWS

*The quantity of brackets you receive will depend on the width of your headrail.

TOOLS REQUIRED

PENCIL

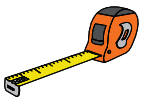

TAPE MEASURE

POWER DRILL

STEP LADDER

LEVEL

5/64" DRILL BIT

PHILLIPS BIT

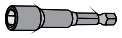

1/4" NUT DRIVER BIT

1. MOUNTING THE BRACKETS

NOTE: The roller shade is pre-installed in the cassette headrail, which simply snaps onto the provided hardware. You will receive two or more cassette brackets, depending on the width of your shade.

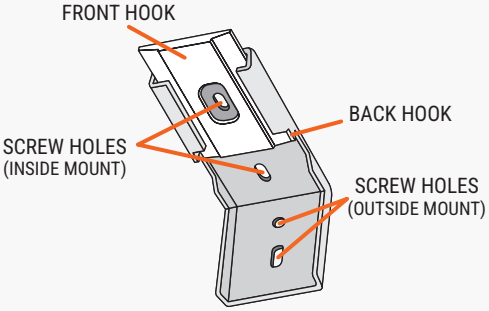

INSIDE MOUNT

1. At the top corners of the window, measure inward and mark with your pencil **2" - 4"** from each side. If you have additional brackets, make an additional mark for each one, evenly spaced between the outer marks.

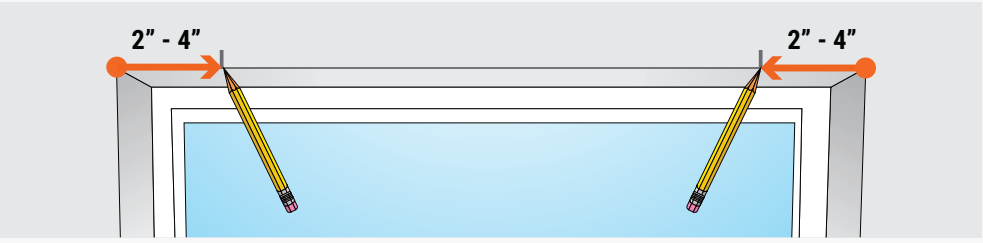

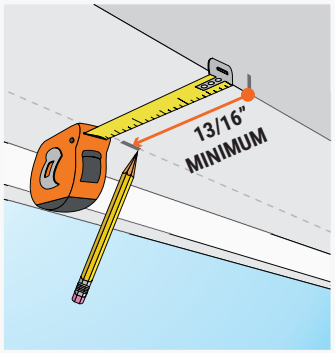

2. Next, you'll need to measure how deep to place your brackets in the window. Starting at one of your marks, measure back at least **13/16"**, and make a mark with your pencil.

If you want the front of the blinds to be flush with the wall, measure back **3"** (with exposed roll version) or **3 7/8"** (with cassette version) and make a mark.

Repeat this step until you've marked the same depth measurement for each bracket.

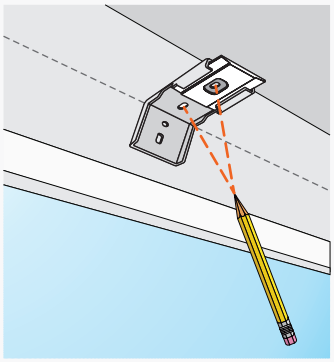

3. Hold each bracket up to the ceiling or window frame so the release lip lines up with your mark. Mark the holes in each bracket, then use your pencil to mark where the screws will go. Repeat this step until you've marked the screw holes for each bracket.

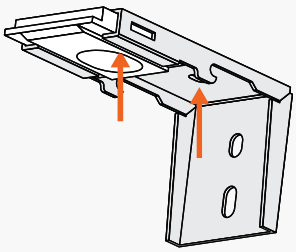

OUTSIDE MOUNT

1. At the top corners of the window, measure inward and mark with your pencil **2" - 4"** from each side. If you have additional brackets, make an additional mark for each one, evenly spaced between the outer marks.

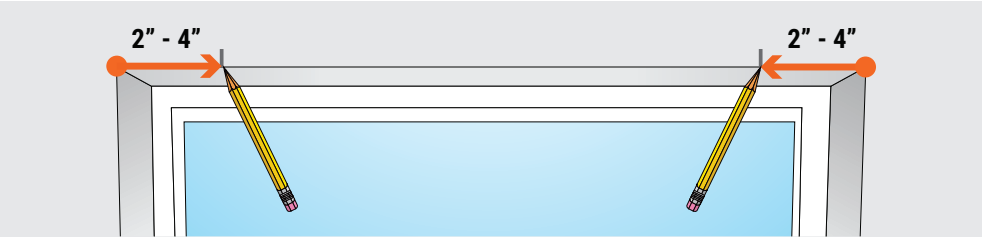

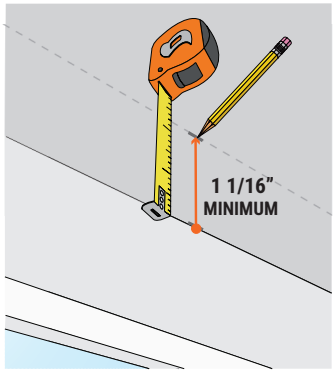

2. From one of these marks, measure upward and mark the height for the bracket placement. The minimum requirement is **1 1/16"**, but if you want the brackets to clear the top of the window, measure and mark at least **1 1/2"** above your window. Repeat this until you've marked the same height measurement for each bracket.

3. Position a bracket so that the back is against your mounting surface, and the top is aligned with one of your upper marks. Hold the bracket in place and mark with your pencil where the screws will go. Repeat this until you've marked the screw holes for each bracket.

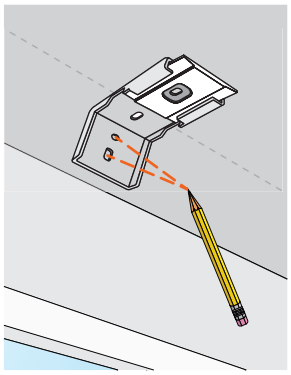

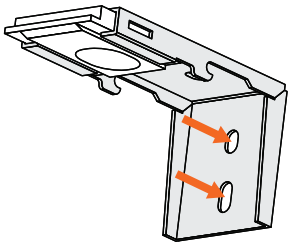

4. Pre-drill the screw holes with a 5/64" drill bit at your marks for each bracket location. Before you mount the brackets, you may want to erase any pencil marks that remain on the mounting surface.

5. Line up your first bracket with the screw holes, and insert two screws to secure the bracket to the mounting surface. Repeat this step for any remaining brackets. When all brackets are secure, you're ready to mount the shade into the window (see below).

2. ATTACHING THE SHADE

NOTE: Before you attach the shade to the brackets, check that your brackets are straight and aligned with each other. The screw holes on all brackets are elongated, so making small adjustments is easy.

Inside Mount: Use a tape measure to check that each bracket is set to the same depth. If you need to make adjustments, slightly loosen the screws on a bracket and shift it back or forward. Secure the screws when the position is corrected.

Outside Mount: Use a tape measure to check that each bracket is set to the same height, and use a level on top of each bracket to make sure they're all straight and aligned. If you need to make adjustments, slightly loosen the screws on a bracket and shift it until it's level and set to the correct height.

HEADRAIL ROLLER SHADE

1. While holding the roller shade hanging at the front hook of the bracket, push back againts the front and raise the back of the headrail and pull upwards untyl it snaps into place.

2. The roller shade's cordless mechanism is locked with a locking pin to prevent it unrolling during transit. Before you operate the shade for the first time, locate the locking pin and simply pull it out to remove it.

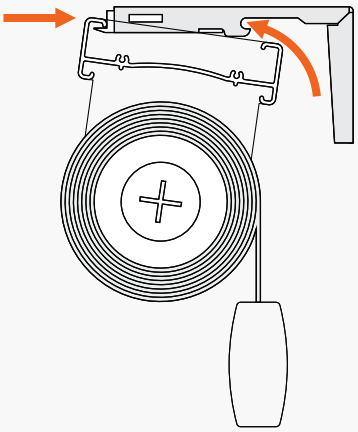

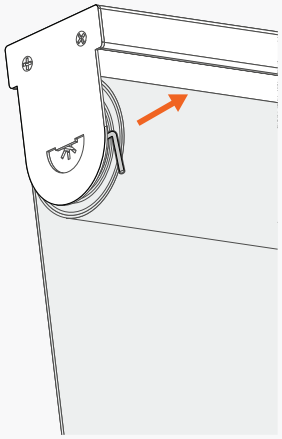

CASSETTE ROLLER SHADE

1. While holding the roller shade hanging at the front hook of the bracket, push back againts the front and raise the back of the headrail and pull upwards untyl it snaps into place.

2. The roller shade's cordless mechanism is locked with a locking pin to prevent it unrolling during transit. Before you operate the shade for the first time, locate the locking pin and simply pull it out to remove it.

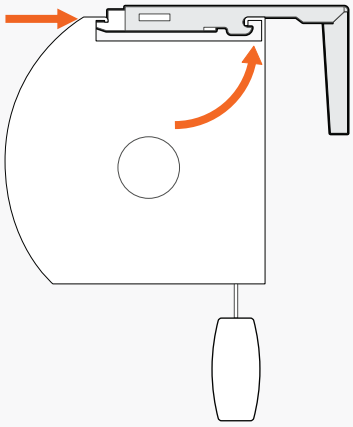

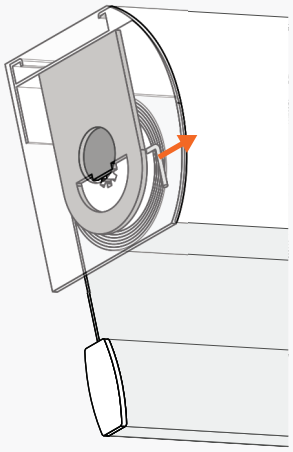

3. INSTALLING NO-DRILL BLINDS HEADRAIL

NOTE: The No-drill Blinds will already be installed onto the existing product headrail. Remove the product from the headrail before installing the shade.

PREPARING THE NO DRILL BLINDS HEADRAIL

1. Pull the lever from below or push down on the mechanism from above to retract the tension block.

2. Install the metal strips or padded adhesive tape on opposite sides of the window opening where you'll be installing the No-Drill Blinds Headrail.

To stick them, peel the covers from the sticky pads on the back the stick one to each end of the No-Drill Blinds Headrail.

This is optional if you find that the No-Drill Blinds Headrail slips against the wall once the blind is fitted and this plate is only available on larger product.

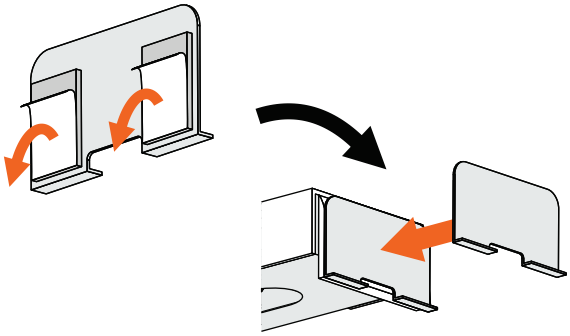

INSTALLING THE METAL STRIP - STEP 2

INSTALLING THE NO DRILL BLINDS HEADRAIL

1. At the end of the headrail opposite to the lever there is an adjustment block that allows you to fine-tune the fittings of the rail.

Use a flat-head screwdriver to twist the small red plugs in toward the center of the headrail. Slide the block out of the headrail by a few millimeters, then twist the red plugs back into their original position to fix the block in place.

Make small adjustment only, repeating as necessary for a tight fit.

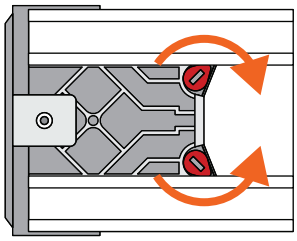

2. Hold the No-Drill Blinds Headrail up against the top of window opening and make it flush, then push the lever firmly upwards until the rail snaps into place.

3. Insert the shade onto the brackets.

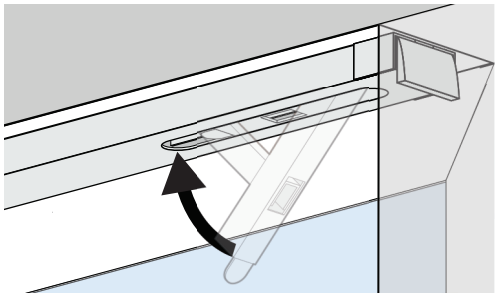

UNINSTALLING THE NO DRILL BLINDS HEADRAIL

Removing the product from the headrail by using a flat-head screwdriver to unlatch the lever. Make sure to hold the No-Drill Blinds Headrail in place while unlatching th lever. This will prevent damage to the window or headrail.

INSTALLATION GUIDE

ROLLER SHADES

LIFT SYSTEMS: CONTINOUS CORD LOOP | MOTORIZATION

The difficulty level of this installation is ranked at **Level 2** - *You got this!*

If you have questions or get stuck, call our Customer Care Team at 888-257-1840, or email customercare@selectblinds.com

HARDWARE AND PARTS INCLUDED

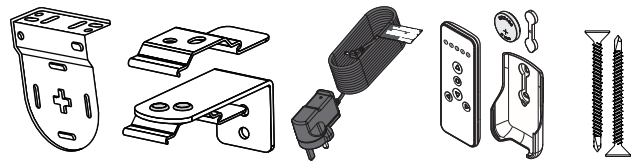

EXPOSED ROLL BRACKETS | CASSETTE BRACKETS | BATTERY CHARGER | REMOTE & HOLDER | SCREWS

*The quantity of brackets you receive will depend on the width of your cassette headrail.

TOOLS REQUIRED

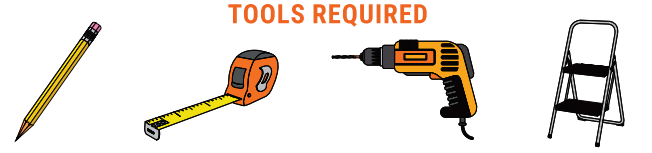

PENCIL | TAPE MEASURE | POWER DRILL | STEP LADDER

LEVEL | 5/64" DRILL BIT | PHILLIPS BIT | 1/4" NUT DRIVER BIT

1. MOUNTING THE BRACKETS

EXPOSED ROLL BRACKETS

NOTE: The motor is hidden inside the roller tube of the shade. The Motor Bracket goes on the right side of your window and the Pin Bracket goes on the left side of your window. Regardless of your roll position (standard or reverse roll) or installation method (inside mount or outside mount), the brackets are positioned the same.

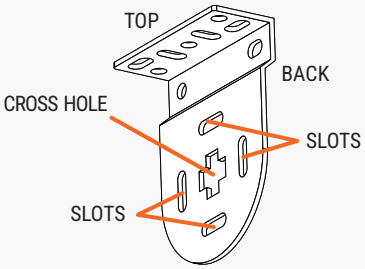

EXPOSED ROLL - INSIDE MOUNT

1. At the top-right corner of the window, measure how deep you wish to place your bracket (at least **2"** required), and make a mark with your pencil. Repeat this step at the top-left corner of the window, using the same depth measurement.

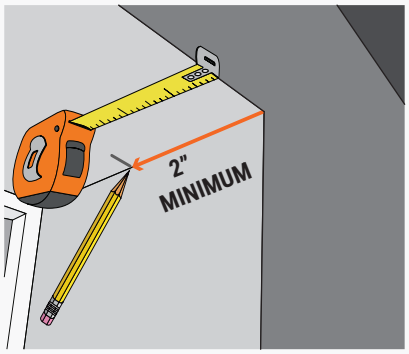

2. Set your bracket in the window so that the back edge aligns with your mark. Hold the bracket in position and use your pencil to mark through the top screw holes (**TOP MOUNT**) or the back screw holes (**SIDE MOUNT**). Repeat this step with your corresponding bracket on the opposite side of the window.

3. Pre-drill holes with a **5/64"** drill bit at your previous marks on each side of the window.

4. Line up each bracket with the holes you drilled, and insert the screws. Once you have secured both brackets, you're ready to mount the shade into the window .

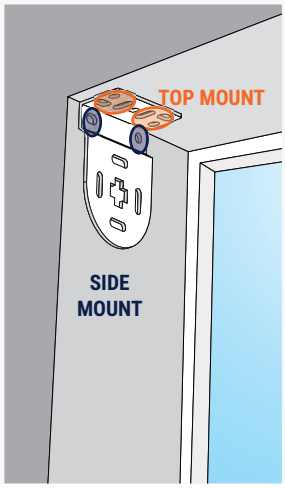

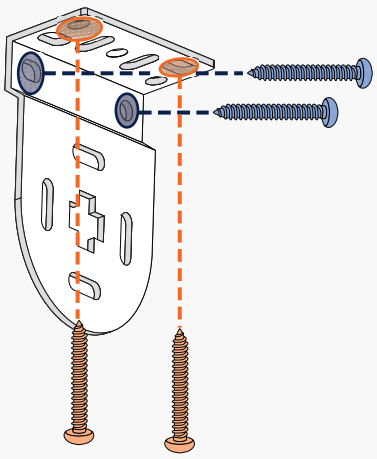

EXPOSED ROLL - OUTSIDE MOUNT

NOTE: The steps for mounting an exposed roll shade are the same, regardless of the bracket style you received.

1. At the top-left and top-right corners of the window, measure the height you wish to place your brackets (at least **2"** required) and make a mark with your pencil.

2. Determine the difference in width between your shade and your window, and then divide it in half. From your previous marks, measure this distance away from the window, and make another mark with your pencil.

EXAMPLE: *If your window is 48" wide and your roller shade is 52", the difference is 4". This means we measure and mark 2" away from the window, starting at the previous marks.*

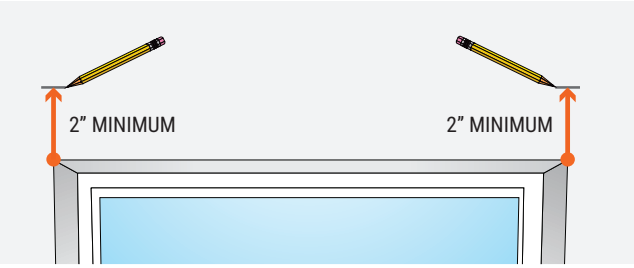

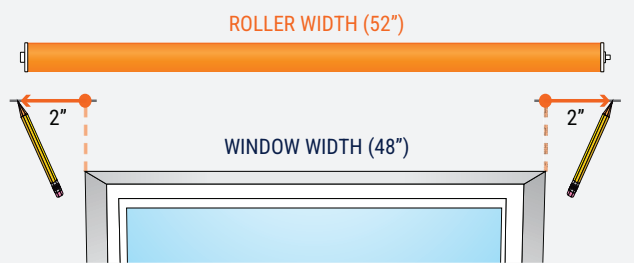

3. Center the left-side bracket at the outermost mark as shown, and use your pencil to mark the screw holes. Repeat this step with your right-side bracket at the outer-right mark.

4. Pre-drill the screw holes with a **5/64"** drill bit at your marks on both sides of the window. Before you attach the brackets, you may want to erase any pencil marks that remain on the mounting surface.

5. Line up your left-side bracket with the screw holes, and insert two screws to secure the bracket to the mounting surface. Repeat this step for your right-side bracket. When both brackets are secure, you're ready to mount the shade into the window.

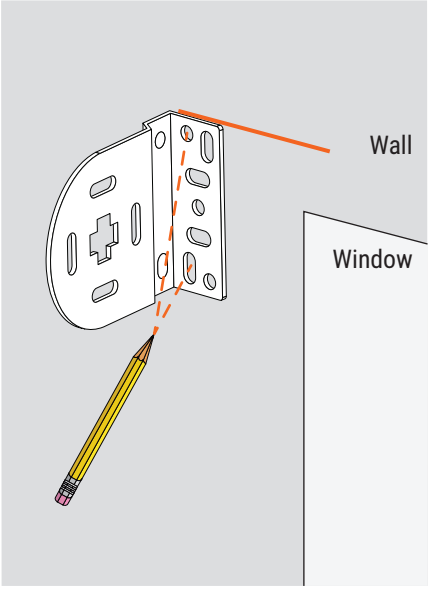

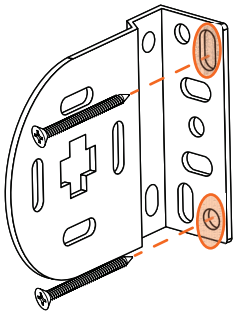

MOUNTING CASSETTE HEADRAIL BRACKETS

NOTE: The roller shade tube is pre-installed in the cassette headrail, which simply snaps onto the provided hardware. You will receive two or more cassette brackets, depending on the width of your shade.

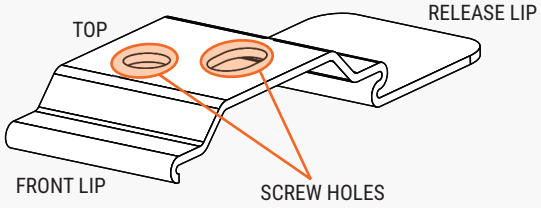

INSIDE MOUNT CASSETTE BRACKET

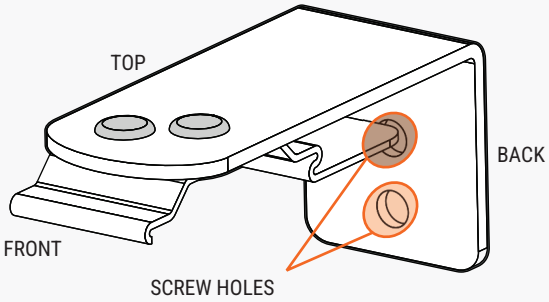

OUTSIDE MOUNT CASSETTE BRACKET

CASSETTE HEADRAIL - INSIDE MOUNT

1. At the top corners of the window, measure inward and mark with your pencil **2" - 4"** from each side. If you have additional brackets, make an additional mark for each one, evenly spaced between the outer marks.

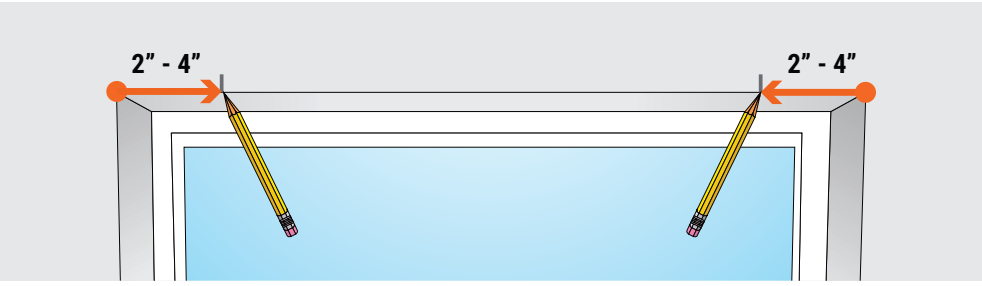

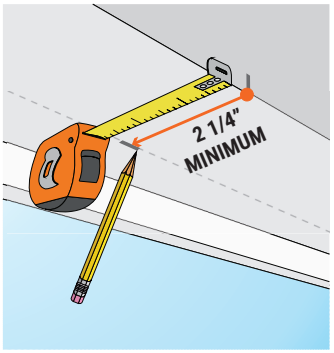

2. Next, you'll need to measure how deep to place your brackets in the window. Starting at one of your marks, measure back at least **2"**, and make a mark with your pencil. If you want the front of the cassette to be flush with the wall, measure back **3 1/2"** and make a mark. Repeat this step until you've marked the same depth measurement for each bracket.

3. Hold each bracket up to the ceiling or window frame so the release lip lines up with your mark. Mark the holes in each bracket, then use your pencil to mark where the screws will go. Repeat this step until you've marked the screw holes for each bracket.

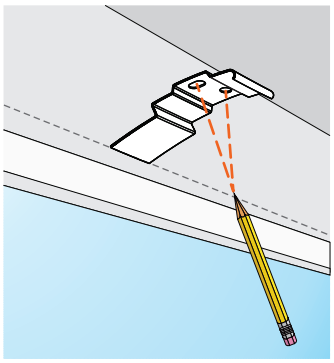

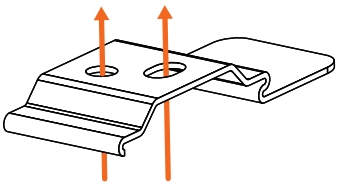

4. Pre-drill the screw holes with a **5/64"** drill bit at your marks for each bracket location. Before you mount the brackets, you may want to erase any pencil marks that remain on the wall or window.

5. Line up your first bracket with the screw holes, and insert two screws to secure the bracket to the mounting surface. Repeat this step for any remaining brackets. When all brackets are secure, you're ready to mount the shade into the window.

CASSETTE HEADRAIL - OUTSIDE MOUNT

1. At the top corners of the window, measure inward and mark with your pencil **2" - 4"** from each side. If you have additional brackets, make an additional mark for each one, evenly spaced between the outer marks.

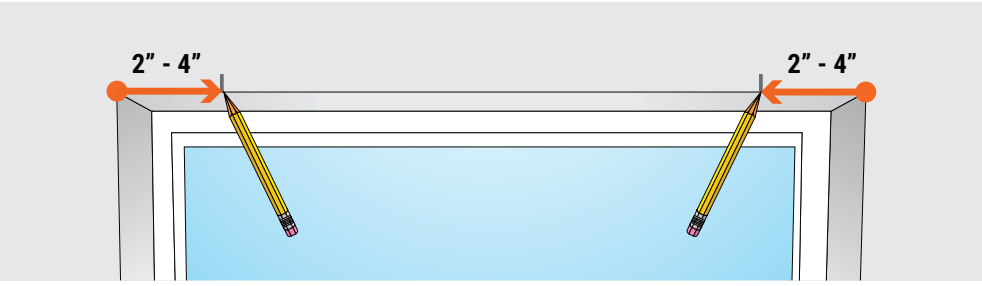

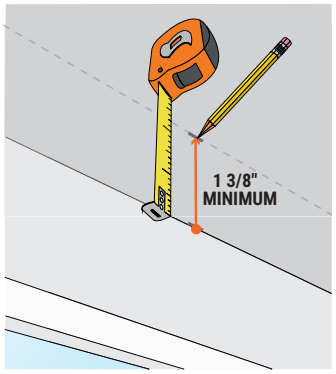

2. From one of these marks, measure upward and mark the height for the bracket placement. The minimum requirement is **1 3/8"**, but if you want the brackets to clear the top of the window, measure and mark at least **3 7/16"** above your window. Repeat this until you've marked the same height measurement for each bracket.

3. Position a bracket so that the back is against your mounting surface, and the top is aligned with one of your upper marks. Hold the bracket in place and mark with your pencil where the screws will go. Repeat this until you've marked the screw holes for each bracket.

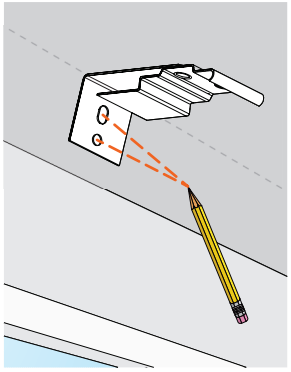

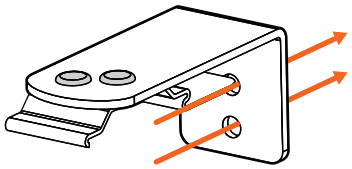

4. Pre-drill the screw holes with a **5/64"** drill bit at your marks for each bracket location. Before you mount the brackets, you may want to erase any pencil marks that remain on the mounting surface.

5. Line up your first bracket with the screw holes, and insert two screws to secure the bracket to the mounting surface. Repeat this step for any remaining brackets. When all brackets are secure, you're ready to mount the shade into the window (see below).

2. ATTACHING THE SHADE

NOTE: Before you attach the shade to the brackets, check that your brackets are straight and aligned with each other. The screw holes on all brackets are elongated, so making small adjustments is easy.

Inside Mount: Use a tape measure to check that each bracket is set to the same depth. If you need to make adjustments, slightly loosen the screws on a bracket and shift it back or forward. Secure the screws when the position is corrected.

Outside Mount: Use a tape measure to check that each bracket is set to the same height, and use a level on top of each bracket to make sure they're all straight and aligned. If you need to make adjustments, slightly loosen the screws on a bracket and shift it until it's level and set to the correct height.

EXPOSED ROLL

1. While holding the roller shade in your hands, put the pin end into the cross hole of the bracket.

2. Keep the pin end secured in its bracket, insert the hooks on the motor head straight into the slots in the bracket. Once the three hooks are through the slots, gently pull down on the motor head until the hooks have locked securely to the bracket. The bottom of the motor head should point straight down.

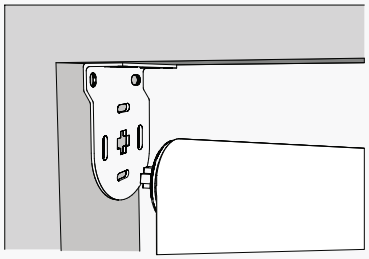

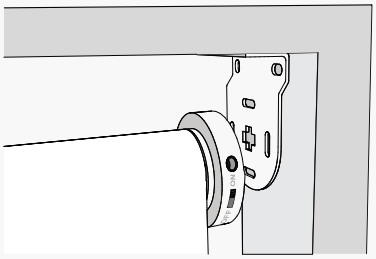

CASSETTE HEADRAIL

1. Grab the cassette and hold it up to your brackets. Set the front edge of the headrail onto the front hook of each bracket. While in this position, you can slide the shade left or right until the cassette is centered.

2. When you're ready to secure the headrail, push the headrail upward until the back lip of each bracket snaps onto the back edge of the cassette. When the shade is installed, you may safely remove the bubbled wrapped around the roller.

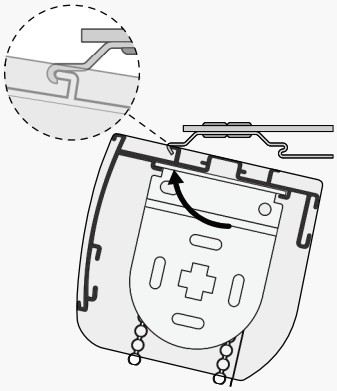

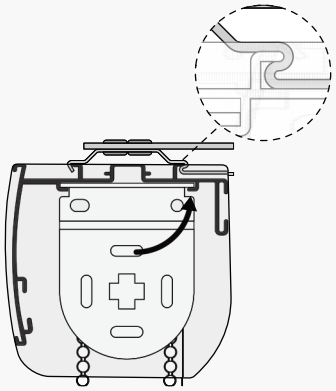

3. PROGRAMMING AND USING YOUR REMOTE

MOTORIZED ROLLER SHADES

WARNING: DO NOT attempt to raise or lower your motorized shade with your hands. This may cause permanent damage to the motor, and other components in the headrail, which may not be covered under your warranty.

Your shade's motor and remote(s) are pre-programmed at the factory, and are ready to use once the shade is installed. Look for the tag with two numbers on the back of each bottom rail. This indicates which channel and remote your shade is programmed to.

While it is not necessary to follow the steps below, we recommend familiarizing yourself with the basics of programming the motor and your remote to better understand how your motorized shade works.

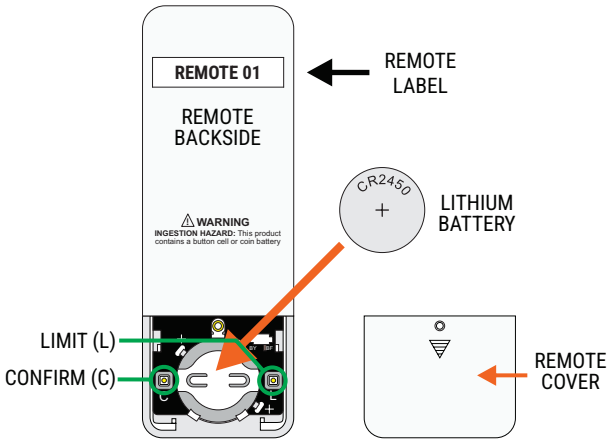

HOW TO USE THE REMOTE

Press and hold the **Down** button to lower the shade. You can release when the shade begins lowering.

Press and hold the **Up** button to raise the shade. You can release when the shade begins raising.

Press the **Stop** button to halt the up or down movement. If you later choose to program a favorite position, holding the **Stop** button will automatically lift or lower the shade to this position.

Choose a channel by pressing the **Channel Increase** and **Channel Decrease** buttons. The **Channel Display** at the top of the remote will illuminate the channel you are currently on.

To operate all your shades at the same time, set the remote to Channel 5, and then press the **Channel Increase** button. This will illuminate all the **Channel Display** lights, which activates motors on all channels.

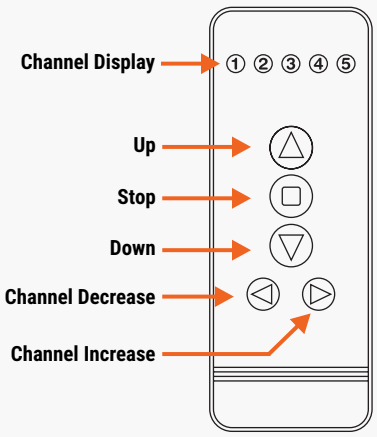

PAIRING THE REMOTE WITH A MOTOR

NOTE: The factory pairs each of your shades to the remote. The following steps are only necessary if you want to change how the channels are configured, or if you are adding a new shade to a remote already in use .

1. Make sure that the motor's **POWER SWITCH** is set to **ON.**

2. Set the remote to which ever channel you want to program the shade to.

3. Push and hold the **PROGRAM BUTTON** the motor head until the shade jogs.

4. With your finger, quickly press and hold the **Confirm (C)** button on the back of the remote.

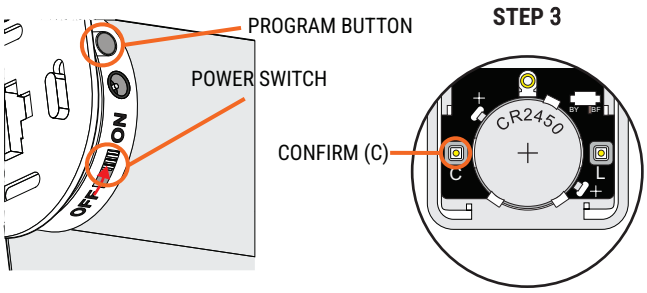

DELETING A CHANNEL FROM THE MOTOR

NOTE. Removing a remote or channel from a shade does not delete or reset the limit settings.

1. Select the channel you'd like to disconnect the shade from.

2. Press the **Confirm** button repeatedly (about 3 - 7 presses); the shade will jog three individual times. After the third jog, your channel is removed from the shade, and ready to be assigned to a new channel or a new remote.

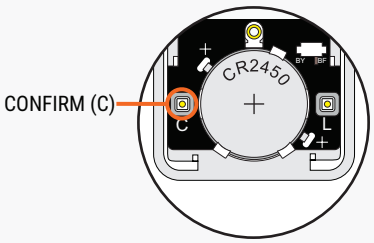

ADJUSTING UPPER AND LOWER LIMITS

NOTE: The upper and lower limits are already set-up at the factory, so the following steps are only necessary if you want to change how these settings are configured. Both limits must be reprogrammed in these instructions.

1. Start with the shade fully raised. For a few seconds, press and hold the **Limit** button until the shade jogs. Your motor is now in programming mode.

2. Press **Down** to lower the shade until it's almost to the bottom, then press **Stop**. From here, repeatedly press **Down** to lower the shade slowly.

3. When the shade reaches the desired bottom position, flip the remote and use your pen to press the **Confirm** button. The shade will jog to acknowledge that your lower limit is now set, but the motor is still in programming mode.

4. Press **Up** to raise the shade until it's almost to the top, then press **Stop**. From here, repeatedly press **Up** to raise the shade slowly.

5. When the shade reaches the desired top position, flip the remote and use your pen to press the **Confirm** button. The shade will jog to acknowledge that your upper limit is now set, and the motor will automatically exit programming mode.

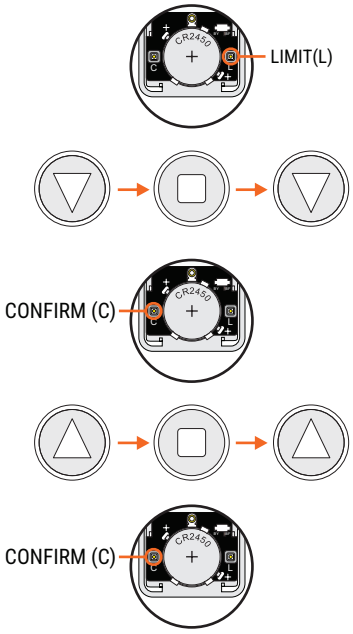

SETTING A FAVORITE POSITION (OPTIONAL)

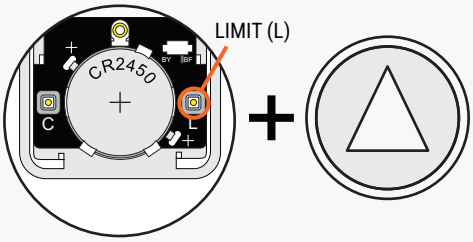

1. Start with the shade raised fully, then press the **Down** button for the shade to lower.

2. Press **Stop** at the position you wish to save as your favorite.

3. Simultaneously press and hold the **Limit** button and the **Up** button, until the shade jogs. Your favorite position is now set. If you wish to change the favorite position, simply repeat these steps again.

MOUNTING THE REMOTE HOLDER

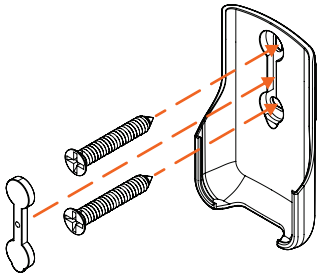

NOTE: A wall mount remote holder is included with your remote, but it is optional to install it.

1. Determine where you'd like to place your remote carrier in the room. It is common to place it near a light switch, or on the wall next to the window.

2. With the holder in the upright position, insert the provided screws to secure it to our mounting surface.

3. After the screws are attached to the wall, insert the screws cap cover to the desired position in the remote holder.

REPLACING THE REMOTE BATTERY

NOTE: The battery used to power your remote is a coin-shaped 3V cell battery (CR2450). Additional batteries are not included.

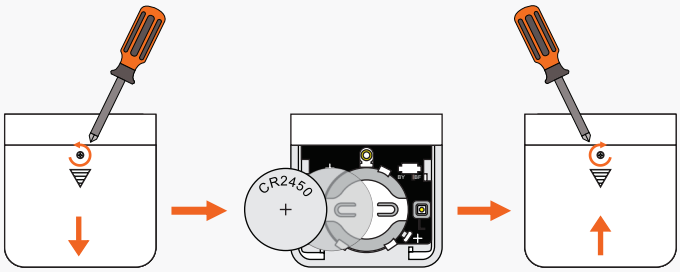

1. To remove the back cover of the remote, use a small screwdriver to remove the battery screw. Gently slide the back cover up to disengage it, then lift it away from the remote.

2. Remove the old battery from the circuit board by tilting it out of the socket holding it down. Press a new 3V cell battery in the socket with the "+" positive side showing.

3. Slide the back cover of the remote, and secure the battery screw.

NOTE:

- Remove and immediately recycle or dispose of used batteries according to local regulations and keep away from children. DO NOT dispose of batteries in household trash or incinerate.
- Even used batteries may cause severe injury or death.
- Call a local poison control center for treatment information.
- Battery type: CR2450
- Non-rechargeable batteries are not to be recharged.
- Nominal battery voltage: 3V
- Temperature Rating: 45°C
- Do not force discharge, recharge, disassemble, heat above (manufacturer's specified temperature rating) or incinerate. Doing so may result in injury due to venting, leakage or explosion resulting in chemical burns.
- Ensure the batteries are installed correctly according to polarity (+ and -).
- Do not mix old and new batteries, different brands or types of batteries, such as alkaline, carbon-zinc, or rechargeable batteries.
- Remove and immediately recycle or dispose of batteries from equipment not used for an extended period of time according to local regulations.
- Always completely secure the battery compartment. If the battery compartment does not close securely, stop using the product, remove the batteries, and keep them away from children.

⚠ WARNING

- **INGESTION HAZARD:** This product contains a button cell or coin battery.
- **DEATH** or serious injury can occur if ingested.
- A swallowed button cell or coin battery can cause **Internal Chemical Burns** in as little as **2 hours**.
- **KEEP** new and used batteries **OUT OF REACH of CHILDREN**
- **Seek immediate medical attention** if a battery is suspected to be swallowed or inserted inside any part of the body.

5. ADDITIONAL INSTRUCTIONS

INSTALLATING CHAIN TENSION DEVICE

NOTE: Cord or chain tension device are used to ensure the smooth operation of your shade and to help protect children from getting tangled in loose chains. If there is any protective plastic around the chain, remove it before you proceed. Before doing anything, you must first slide the tension device to the bottom of the bead chain loop.

1. Insert a small screwdriver, punch, or awl through the screw at the bottom of tensioner

2. While pressing the tension device release buttons on the sides of the tensioner, move the screw hole down to release the safety mechanism.

3. Slide the tensioner down to the bottom of the bead chain loop, position it at the desired location.

4. Mark the window casement at the notch in the tension device.

5. The goal of using the tension device is to make the chain taut but still slightly loose. The center of the screw hole should be aligned with the notch in the UCT (**±1/8"**). The tensioner can be mounted in 3 three ways (Inside Mount with bracket or without bracket, Outside Mount).

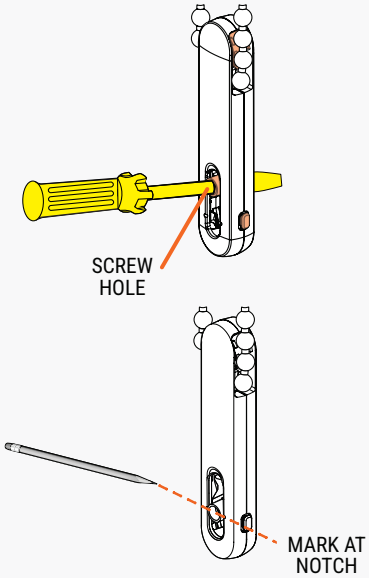

INSIDE MOUNT WITH BRACKET

A. Hold the Tension Device's Inside bracket with its center hole aligned with the mark and mark both hole locations.

B. Drill **1/8"** pilot holes, if wall anchors are required, first tap them into the **7/32"** pre-drilled holes. Use a Phillips screwdriver and the longer provided screws to attach the bracket to the wall.

C. Press the Tension Device release buttons on the sides of the Tension Device while pulling down on the spring-loaded screw hole. Insert the nub on the inside mount bracket into the back of the screw hole in the Tension Device.

D. Insert the small provided screw into the nub through the front of the screw hole and tighten it to secure the Tension Device to the bracket.

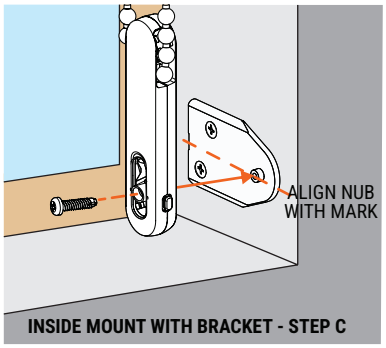

INSIDE MOUNT WITH BRACKET - STEP C

INSIDE MOUNT WITHOUT BRACKET

NOTE: If mounting to a textured or uneven surface, use the provided mounting bracket.

A. Position the tension device with its spring-loaded screw hole aligned with the mark.

B. If a wall anchor is required, first tap the anchor into the **7/32"** pre-drilled hole.

C. Insert the longer provided screws into the spring-loaded screw hole in the tension device and attach the screw.

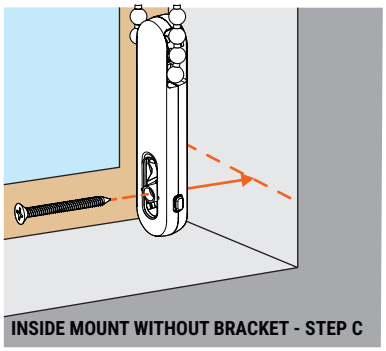
INSIDE MOUNT WITHOUT BRACKET - STEP C

OUTSIDE MOUNT

A. Hold the Tension Device's Outside bracket with its center hole aligned with the mark and mark both screw hole locations.

B. Drill **1/8"** pilot holes, if wall anchors are required, first tap them into the **7/32"** pre-drilled holes . Use a Phillips screwdriver and the longer provided screws to attach the bracket to the wall.

C. Press the tension device release buttons on the sides of the tension device while pulling down on the spring-loaded screw hole. Insert the nub on the inside mount bracket into the back of the screw hole in the tension device.

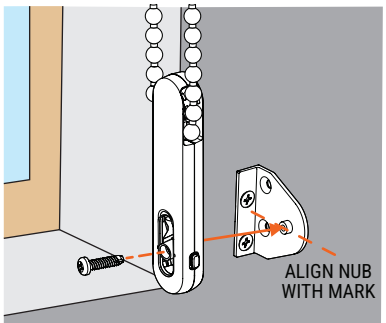

OUTSIDE MOUNT WITH BRACKET - STEP C

D. Insert the small provided screw into the nub through the front of the screw hole and tighten it to secure the tension device to the bracket.

CAUTION:

- The window covering will not operate properly unless the tension device is secured.
- Locate the tension device as close to the window glass as possible to minimize accessibility by children and pets.
- Be sure the tension device is not placed in the path of the bottom rail or fabric, this may cause the bead chain to become too tight, affecting the shade function and increasing bead chain wear.

WARNING: A damaged, loose, or missing tension device poses a strangulation risk to children. Remove from use and repair or replace if tension device is damaged, loose, or missing.

6. INSTALLING NO-DRILL BLINDS HEADRAIL

NOTE: The No-drill Blinds will already be installed onto the existing product headrail. Remove the product from the headrail before installing the shade.

PREPARING THE NO DRILL BLINDS HEADRAIL

1. Pull the lever from below or push down on the mechanism from above to retract the tension block.

2. Install the metal strips or padded adhesive tape on opposite sides of the window opening where you'll be installing the No-Drill Blinds Headrail.

To stick them, peel the covers from the sticky pads on the back the stick one to each end of the No-Drill Blinds Headrail.

This is optional if you find that the No-Drill Blinds Headrail slips against the wall once the blind is fitted and this plate is only available on larger product.

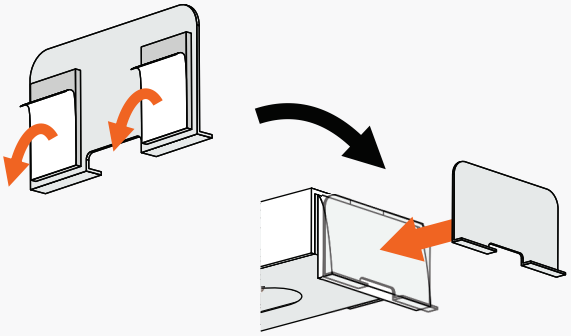

INSTALLING THE METAL STRIP - STEP 2

INSTALLING THE NO DRILL BLINDS HEADRAIL

1. At the end of the headrail opposite to the lever there is an adjustment block that allows you to fine-tune the fittings of the rail.

Use a flat-head screwdriver to twist the small red plugs in toward the center of the headrail. Slide the block out of the headrail by a few millimeters, then twist the red plugs back into their original position to fix the block in place.

Make small adjustment only, repeating as necessary for a tight fit.

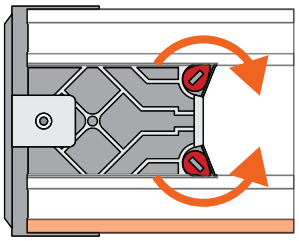

2. Hold the No-Drill Blinds Headrail up against the top of window opening and make it flush, then push the lever firmly upwards until the rail snaps into place.

3. Install the blind onto the brackets

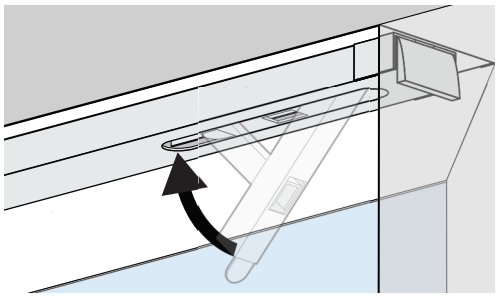

UNINSTALLING THE NO DRILL BLINDS HEADRAIL

Removing the product from the headrail by using a flat-head screwdriver to unlatch the lever. Make sure to hold the No-Drill Blinds Headrail in place while unlatching th lever. This will prevent damage to the window or headrail.